CANISTER ASSEMBLY WITH HARDWARE

APRIL 5, 2018

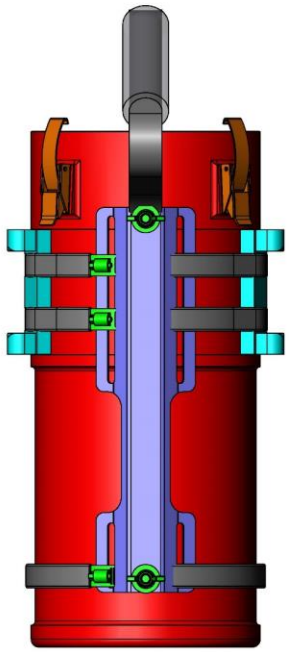

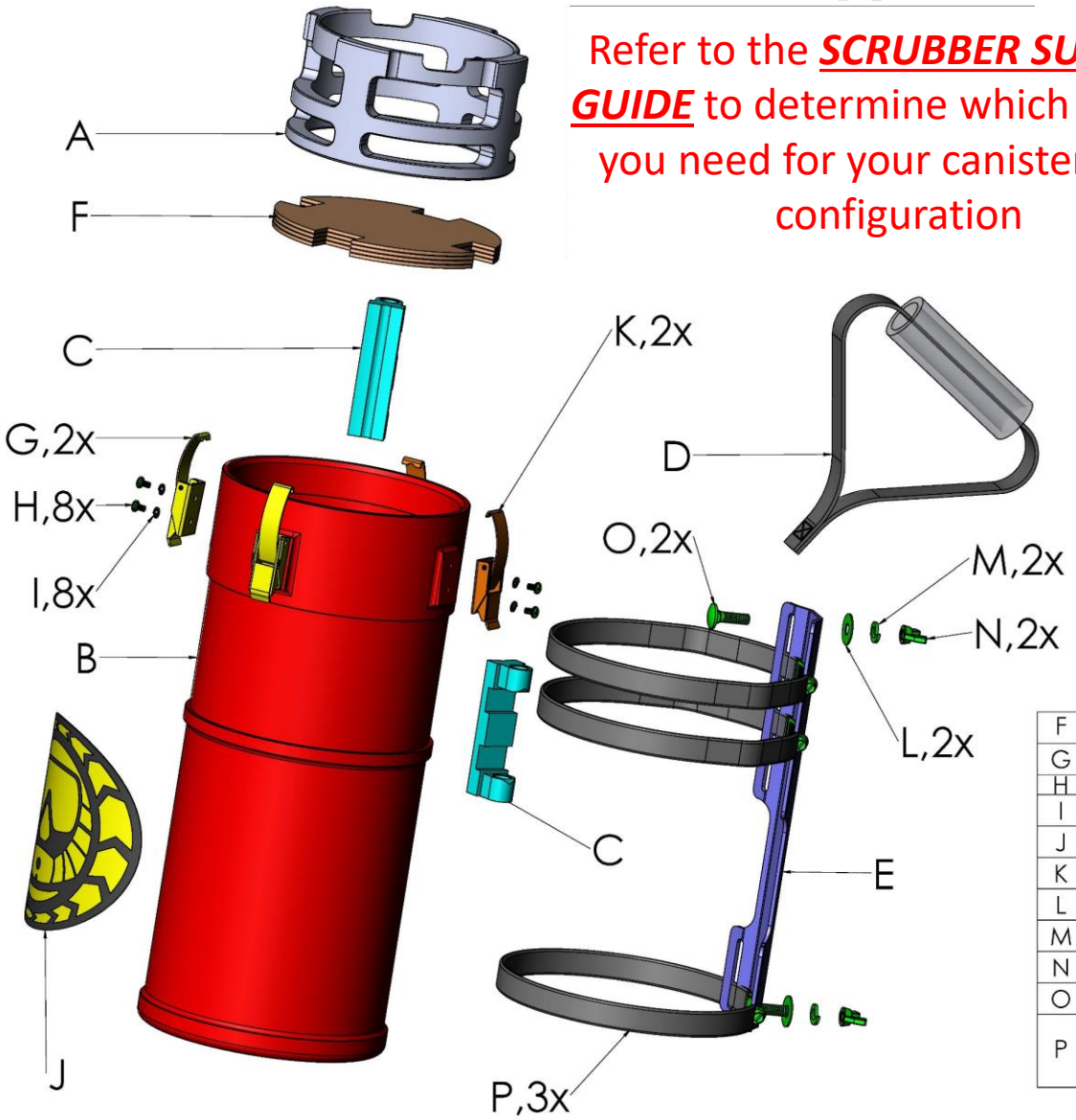

A

Refer to the ***SCRUBBER SUPPORT GUIDE*** to determine which support you need for your canister/head configuration

B

	REV
GP-CAN CAVE Rev4-ASSY (SHOWN)	4
GP-CAN MINI Rev4-ASSY	4

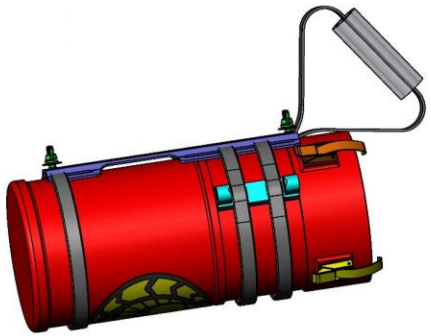

		REV
C	SM-SHADOW GEAR FEMALE	4
D	HAR-HANDLE-ASSY	0
E	GP-STA MEG R2	2

F	GP-MOISTURE PAD-ASSY (pk of 4)
G	GP-LATCH INTERNAL (GRIP BENT IN)
H	FST-SCREW GP LATCH
I	FST-WASHER LOCK GP LATCH
J	DEC-MEG LOGO DECAL
K	GP-LATCH EXTERNAL(GRIP BENT OUT)
L	FST-WASHER FLAT STA
M	FST-WASHER LOCK STA
N	FST-NUT WING STA
O	FST-SCREW STA CARRIAGE BOLT
P	FST-CLAMP HOSE STA MEG (Covered in HAR-NYLON TUBULAR 11/16" 20" x2 for top, 19" for bottom)